stage :
Height : 3.45
Depth : 27.40
Gap : 32.80

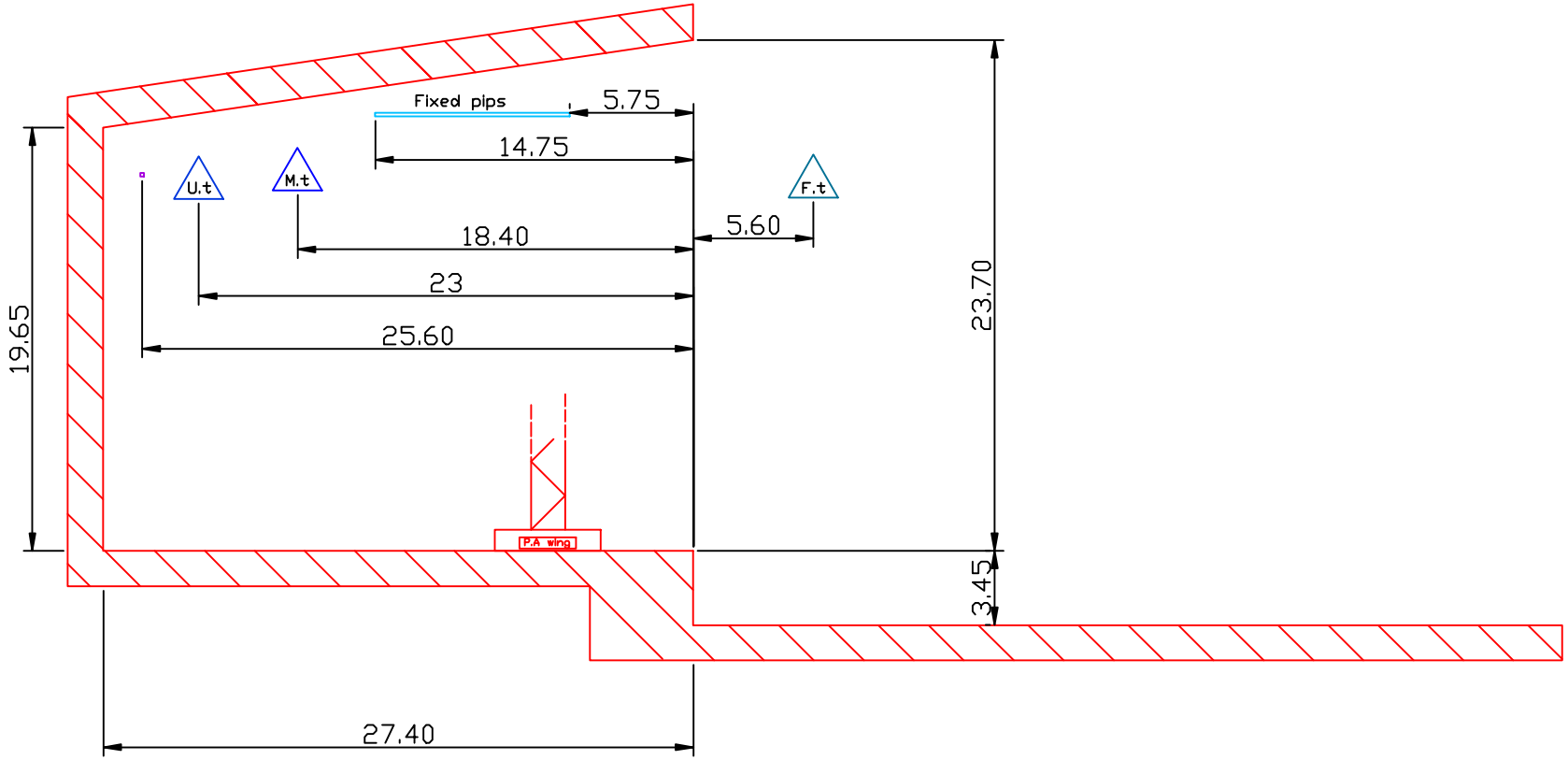

Bataclan
50 Boulevard Voltaire-75011 Paris
tel: 01 43 14 00 30 - fax: 01 48 06 28 12
regie.bataclan@wanadoo.fr

Show:			
Date:	View:	Scale: 1/100	Mesure: Feet